Description

AW-D321 Intelligent Sounder Beacon Base is addressable and loop powered to reduce installation cost. The Base can be used with a detector. The detector can be mounted directly on the base.

The Sounder Beacon Base may be used to give audible alarms and flashing alarms at the scenes of accidents. It is applicable to places like high-rise residential buildings, public places, hotels, amusement buildings, factories, shopping centers,hospitals, schools, office buildings and stock exchanges, and particularly to the places with a low visibility or the possibility of generation of smoke.

LPCB 1426j/01

CE 22 2831-CPR-F4732

Features and Installation

Features

- ✓ Convenient and reliable installation
- ✓ LED Equipped with smoke detector and heat detector
- ✓ Complied with EN 54-3

Installation

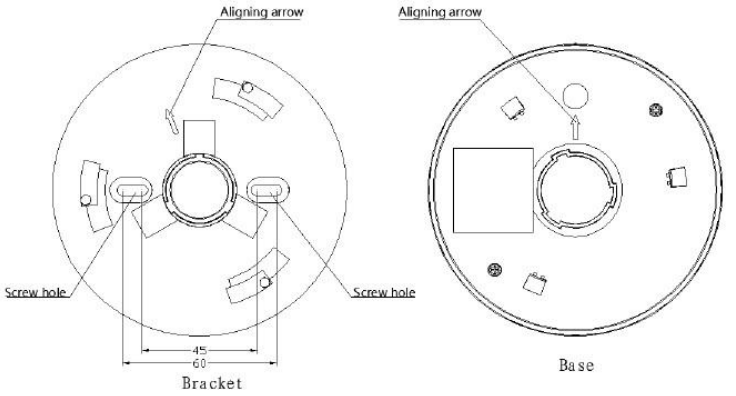

Technical Specification

Model	AW-D321(Type A)
Loop Input	DC 24V(20~28VDC),≤2mA(Monitoring);≤8mA(Alarm)
Power Consumption	≤0.2W @ DC 24V
Sounder Output	≥73 dB(A) @ 1m
Flash Rate	1~2 Hz
Flash Color	Red
Environmental	Temperature range: -10 to 55°C (14~131°F) Humidity: 5 to 95% RH, non-condensing
Materials and colors	ABS, White
Mating Host	AW-FP300
Size	φ 115mm* 44mm
Weight	About 169g